Artemis TI-CS-T11
User Manual

July 2020

Version: 1.0.3

To Users

Dear Users,

Thanks for choosing the Artemis TI-CS-T11 Thermal Scanner.

Please read this user manual carefully before first use. Also please keep this manual in a safe place for reference in the future.

Please operate the scanner according to the recommended instructions in user manual.

We reserve the right to change this user manual without further notice.

⚠ WARNING

KEEP THE CORE FROM DAMPNESS OR RAIN!

DO NOT OPEN OR EXCHANGE PARTS!

REPAIR ONLY WITH AUTHORIZED PARTS

1. Please read this manual carefully before installation.
2. Please pay attention to warning notices on the camera and in this manual.
3. Please use the power supply and voltage exactly as listed in this manual.
4. For safety and camera's proper functioning, please do not power on the camera while connecting cables.
5. Please ensure the intactness of the power cord to avoid injuries and damages.
6. Please install anti-lighting device in case of thunderstruck.
7. Please mount this camera on a secure platform or bracket to avoid injuries.
8. Unauthorized dismantling of this camera may lead to injury or damage, so please contact us directly for any malfunction matters.
9. In order to protect the lens from being stained or scratched, please do not touch it.

⚠ Caution

1. To ensure camera's proper functioning, please do not cover the camera.
2. Protect the camera from direct sunlight to ensure that the detector is not damaged.
3. In case of water leakage, please do not use organic solvent to clean camera's housing.
4. Please wait for another 30 seconds before restarting the camera.
5. In case that a blackbody is used together with the thermal camera, the temperature measurement results will be accurate and stable after the thermal imager is powered on for about 30 minutes.

Table of Contents

Chapter 1 Camera Introduction

1. Overview

The Artemis TI-CS-T11, is a non-contact, large-area, accurate and efficient temperature measurement and screening device specially designed for dense crowds in public places. Based on the accurate temperature measurement technology of thermal imaging, people with abnormal body temperature can be detected and alarmed in time. Therefore, the supervision department can take emergency measures to prevent the spread of virus in public places, and avoid the risk of widespread transmission of infected people. It can be widely used in comprehensive transportation hubs such as airports, railway stations, passenger stations, subway stations, and crowded areas such as schools and parks.

The entire system includes a visible-light camera, a thermal imaging camera and a set of temperature management software. Customers can configure and manage the temperature measuring equipment and temperature alarms by installing the temperature management software.

2. Appearance

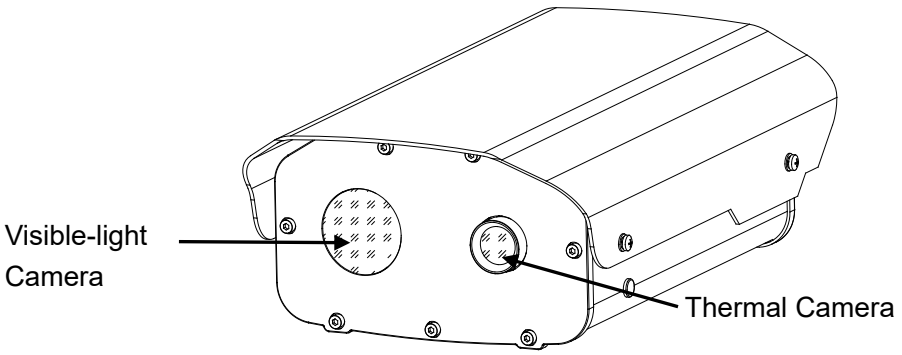

Figure 1-1 Front and lateral view

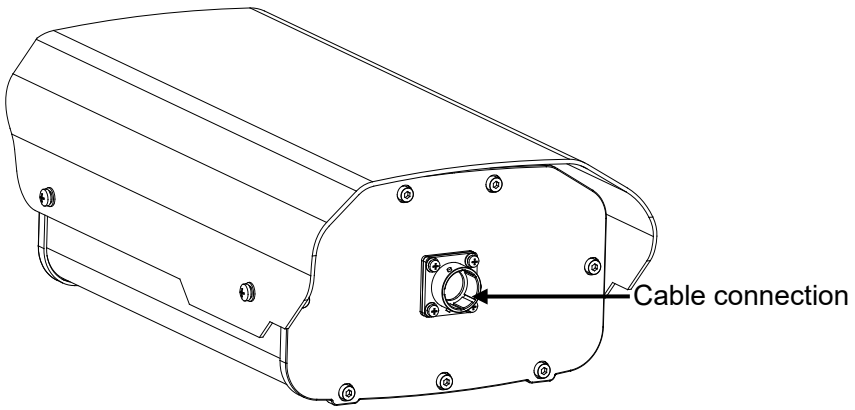

Figure 1-2 Rear and lateral view

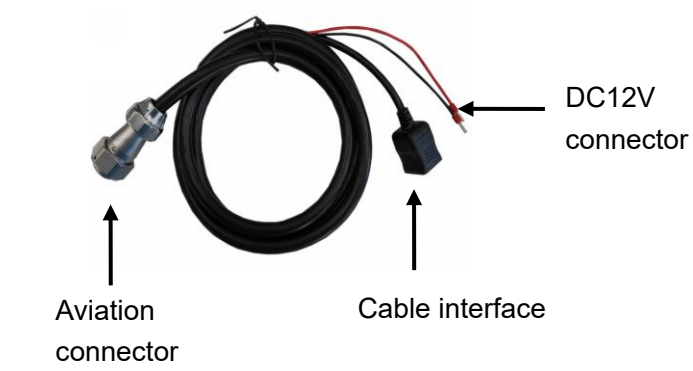

Figure 1-3 Connection cables

3. Dimensions (mm)

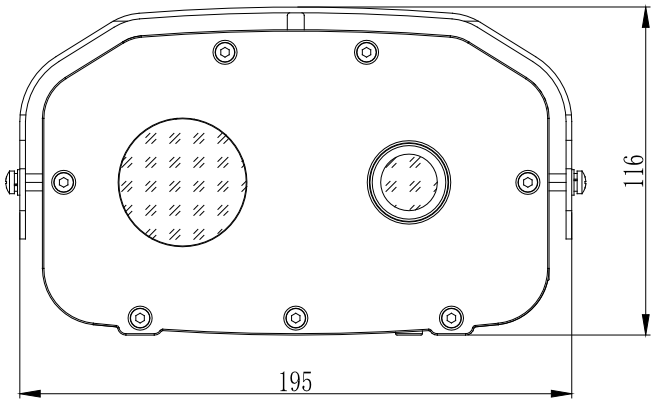

Figure 1-4 Front view

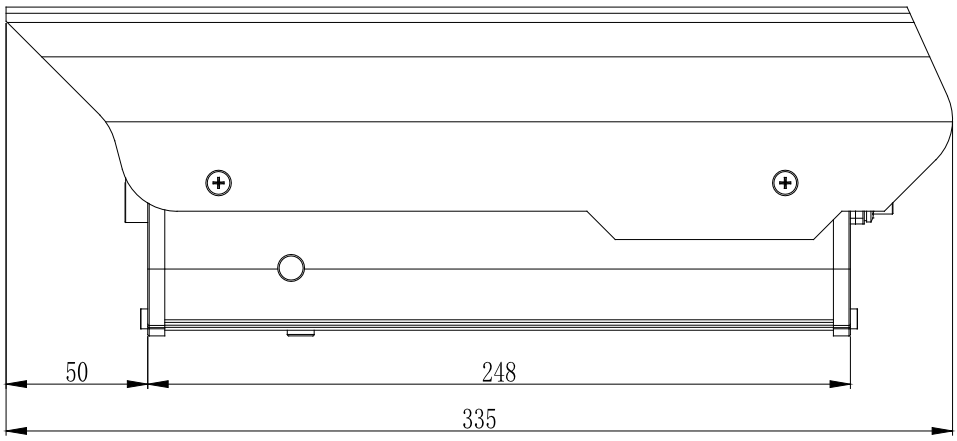

Figure 1-5 Lateral view

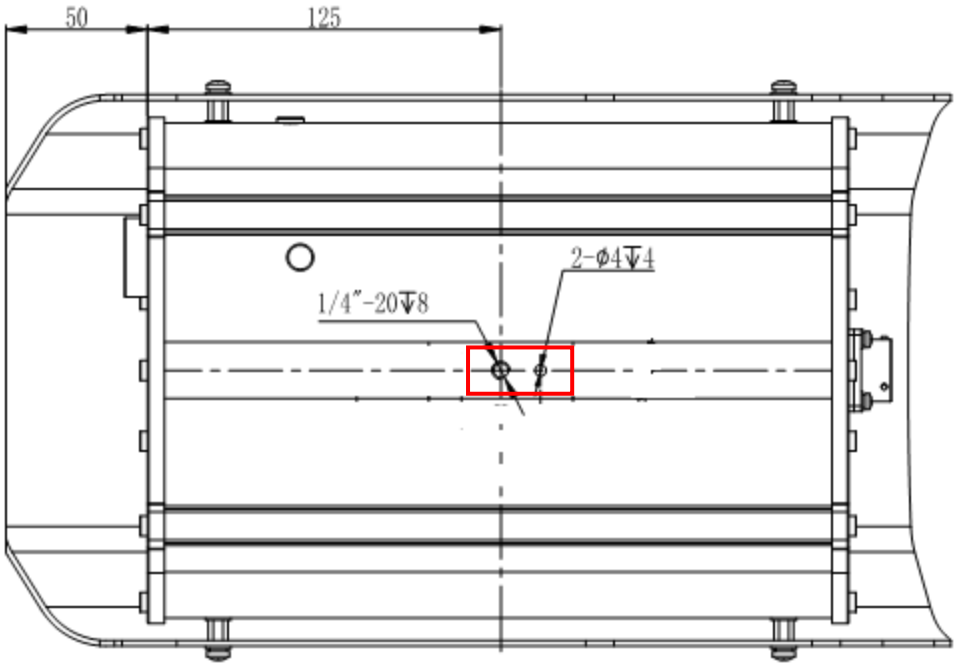

Figure 1-6 Mounting holes at the bottom

4. Connector

Camera output line definitions:

Pin No.	1	2	3	4	5	6
Pin definition	12V+ Red	GND Black	Orange white TX+ (RJ45-1)	Orange TX- (RJ45-2)	Green white RX+ (RJ45-3)	Green RX- (RJ45-6)
Pin No.	7	8	9	10	11	12
Pin definition	Blue	Blue white	Brown white	Brown	NC	NC

Chapter 2 Installation and Operation

1. Installation and Cable Connection

(1) Installation

There are mounting holes at the bottom of the camera, as shown in Figure 1-6. Common photography tripod can be used to install the camera. The following figure shows the installation diagram.

Quick-installation panel:

Remove the panel by pulling the lever slightly backwards.

After placing the panel, press it down to snap the base.

Remove the panel and install it into the mounting hole at the bottom of the temperature measuring camera as shown in figure 2-1.

Figure 2-1 Tripod quick setup

(2) Aviation Connector Installation

Figure 2-2 Aviation Plug

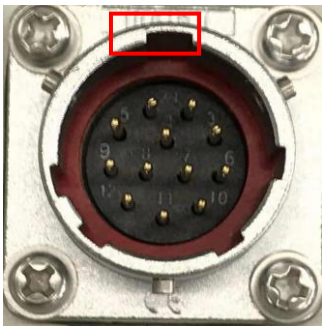

Figure 2-3 Aviation Receptacle

When installing, please insert the aviation plug into the aviation receptacle, make sure that the pins are inserted into the receptacle properly, then twist the metal lock ring clockwise, and then complete the installation after hearing a "click".

When releasing the plug, please twist the plug counterclockwise and pull the plug away from the receptacle.

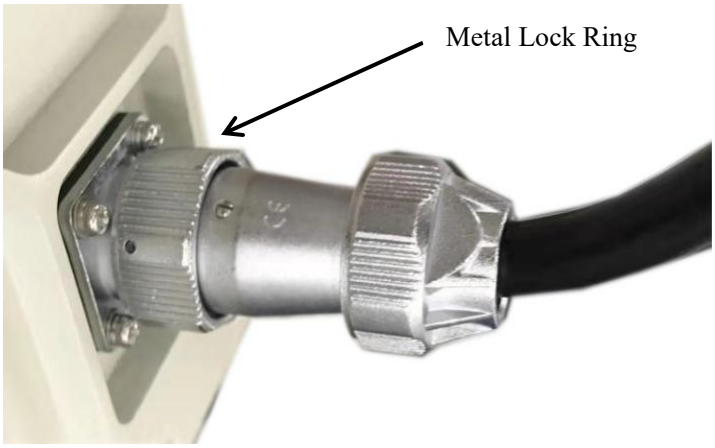

Figure 2-4 Aviation Plug Finished Installation

(3) Cable Connection

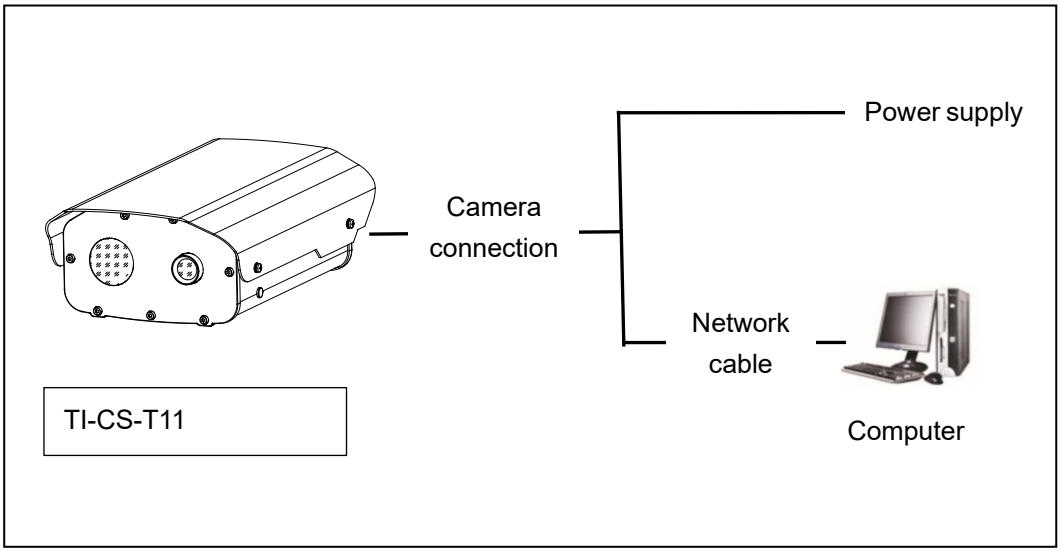

Figure 2-5 connection diagram

2. Recommended Installation Environment

The temperature measurement principle of the infrared camera is measured by collecting infrared radiation from the surface of the human body. The accuracy of temperature measurement is affected by environmental conditions related to infrared transmission, especially air flow, air transmission rate, environmental humidity, environment temperature, and other factors.

Therefore, it is strongly recommended that you install the camera indoor and choose an appropriate installation height and temperature measurement distance:

- Recommended height: 1.8-2 meters
- Effective working distance: 2-5 meters
- Optimal temperature measurement distance: 2-3 meters

The following figure shows the installation environment recommendations.

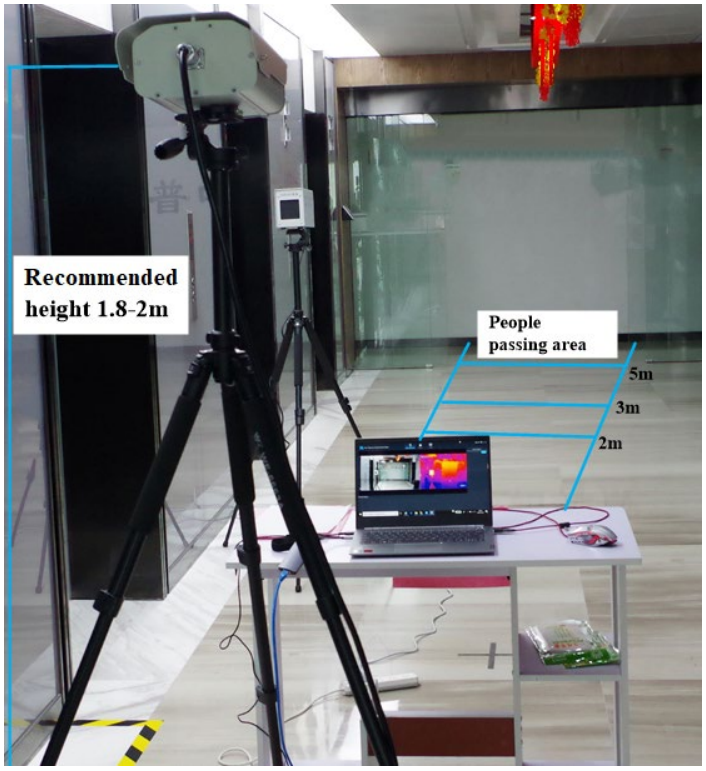

Figure 2-6 Camera installation recommendation

3. Common Faults

The table below introduces common faults that may occur during operation. In case of these problems, you may refer to this table or contact us directly for proper solutions.

Faults	Possible Causes	Solutions
No image on camera after power on	Power damage or underpower	Replace the original power
	Wrong connection of power cord	Reconnect
	Circuit malfunction	Check circuit
	The network is not connected	Make sure the network cable is connected and in good contact
	Firewall blocks video transmission	Turn off the firewall on the client computer
Indistinct image	Lens covered by objects	Check if there is any cover
	Dirty lens	Clear lens

Chapter 3 Blackbody Installation and Settings

1. Product Appearance

Note: Please refer to the delivered equipment for the actual appearance. This picture is for reference only.

2. Instructions

(1) Plug in the power cord of the blackbody. The power supply shall be AC110V/220V.

(2) Press the power switch, the indicator light turns green to indicate that the power is on.

(3) The default temperature is set to 35°C (95 °F), and the temperature of the blackbody will automatically rise to 35 °C (95 °F) when the device is turned on. If a different temperature is set during use, it will automatically rise to the set temperature when it is turned on next time.

(4) Temperature setting:

In this interface, 

, press▲ or ▼ keys to adjust the value in the (SV) window to set the required blackbody temperature, and press the ENT key to confirm. After the blackbody rises to the set temperature, you can start measurement.

(5) The blackbody furnace has been tested in operation when it leaves the factory. All parameters of the intelligent temperature controller have been optimized. In most cases, it's not recommended to change the temperature setting here.

Note: Once you change the temperature here, you must change the blackbody setting to the same value on the webpage.

(6) After use, cut off the power.

3. Precautions

Before use, please check if there is enough space around. There are heat dissipation areas at the bottom and back of the device. When using it, to avoid possible damages to the device, it is recommended to check and clean up any unexpected objects that may be sucked into the device!

The blackbody furnace can be used in a laboratory, a measurement room or a production site, and it should be placed horizontally on a table during use. When setting the device to be calibrated, it shall be kept at a specified distance from the bullseye of the blackbody furnace. At the same time, the device calibration system and the blackbody radiation surface must be on the same axis.

In order to ensure the accuracy of temperature measurement, please place the surface temperature calibrator in a stable temperature environment. The ideal environment temperature is 10℃ (50℉) ～ 25℃ (77℉).

The inspection must start from the low temperature point and then to the high temperature point. In order to prevent the rapid changes in temperature from damaging the components in the furnace, when the temperature rises from low temperature to high temperature or drops from high temperature to low temperature, it is necessary to stop the test and wait for the temperature in the furnace to approach room temperature before starting the test.

Before installing or moving the device, turn off the power to avoid accidents such as electric shock.

When used in the field, the power plug must be reliably grounded!

Do not disassemble the components yourself. If there is any problem, please contact us for maintenance.

4. Installation Instructions

- Blackbody installation

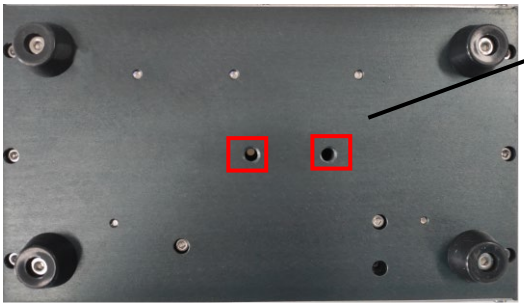

Mounting holes at the bottom of the blackbody

Remove the panel and install it into the mounting hole at the bottom of the black body (either one), and then install the black body onto the tripod.

- Recommended installation height:
  - Thermal imaging temperature measuring camera: 2 meters;
  - Blackbody: 1.8 meters.

- The following figure shows the recommended installation:

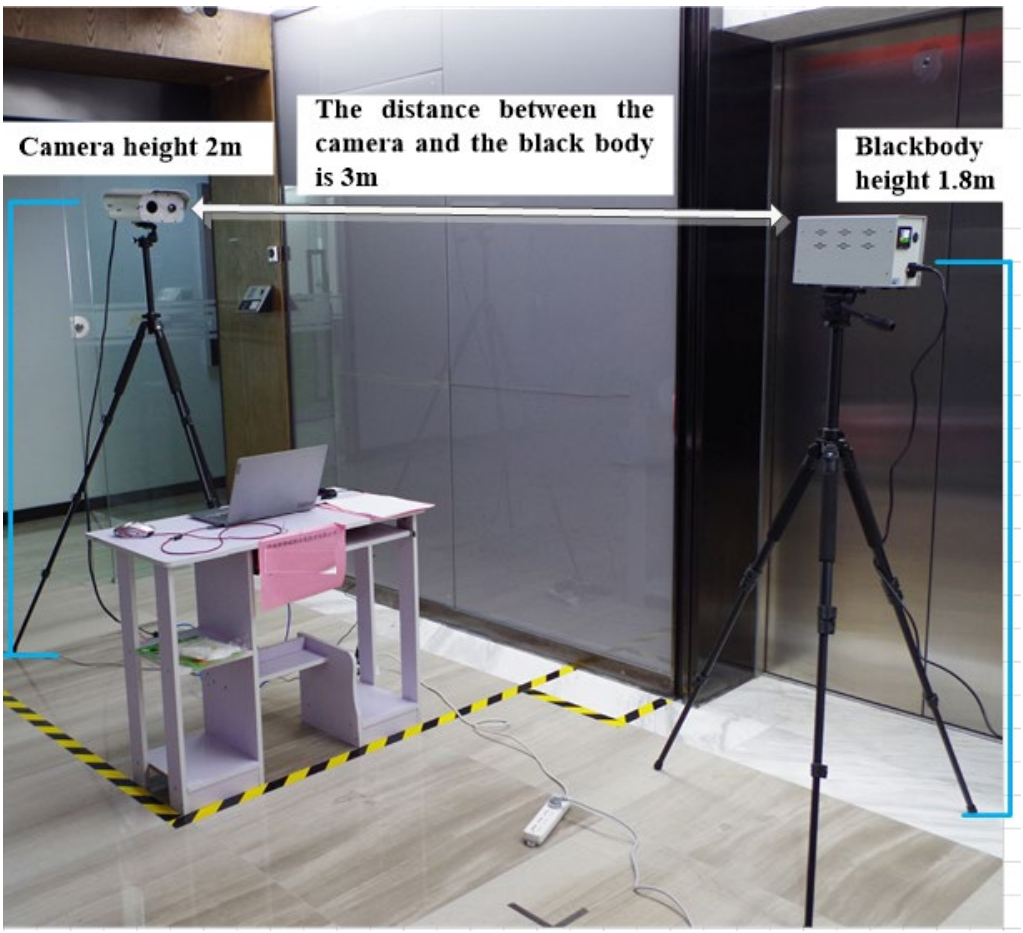

Thermal camera tripod installation diagram

- The thermal imaging camera and the blackbody are installed on the same side, the sidewalk is on the other side, and the distance between the camera and the blackbody is 3 meters, to avoid any obstruction between the camera and the blackbody during temperature measurement.

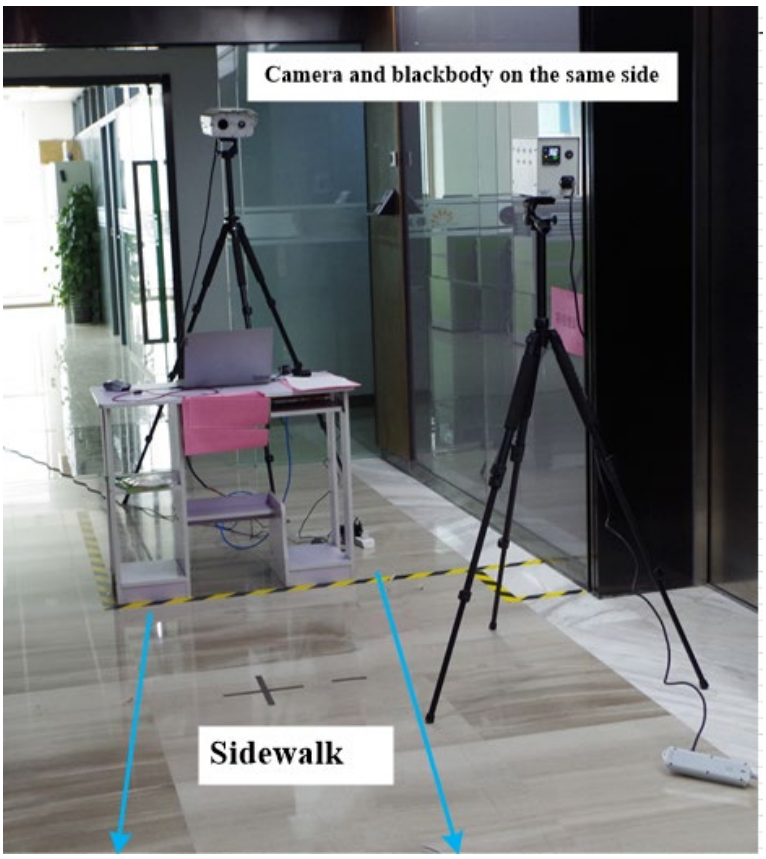

Blackbody installation diagram

- The radiating surface of the blackbody must be facing the camera's irradiation direction, and the blackbody must be on the left or right of the thermal imaging screen.

The following boldface is on the right side of the image:

Blackbody installation diagram

- The camera's top-view angle is less than 30 degrees.
- It is required that the visible light channel has enough illumination, and avoid the effects of backlighting, returning light, strong light change, blocking, and high temperature interference.
- The installation area needs to be relatively isolated and stable from the outside world. It is not suitable for environments with airflow or strong electromagnetic interference or vibration. Avoid outdoor or outdoor communication scenarios.

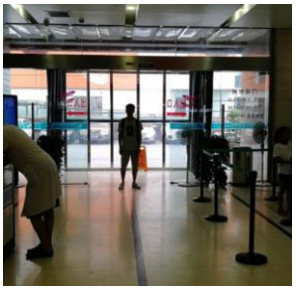

Sample installation scenes to be avoided

(insufficient light: backlight / outdoor scene)

Chapter 4 Camera Configuration Instructions

After you set up T11 and the blackbody, you will need to configure the camera and blackbody on the web page.

It is strongly recommended to use the 32-bit Internet Explorer for web configurations. You may be prompted to install the plug-in at your first login. After downloading and installing the plug-in as prompted, you can log in again to preview the video normally.

Note: For non-IE browsers, please use the compatibility mode other than the speed mode. Edge browser on Windows 10 is not supported.

Web login parameters:

Default IP address for camera: 192.168.1.65

Username: admin

Password: Abc.12345

1. Preview

After logging in to the thermal imager web page, you will enter the video preview interface by default.

2. Region Settings

(1) Go to **Settings** > **Alarm Settings** > **Analysis** > **Human Temperature** > **Region Settings**.

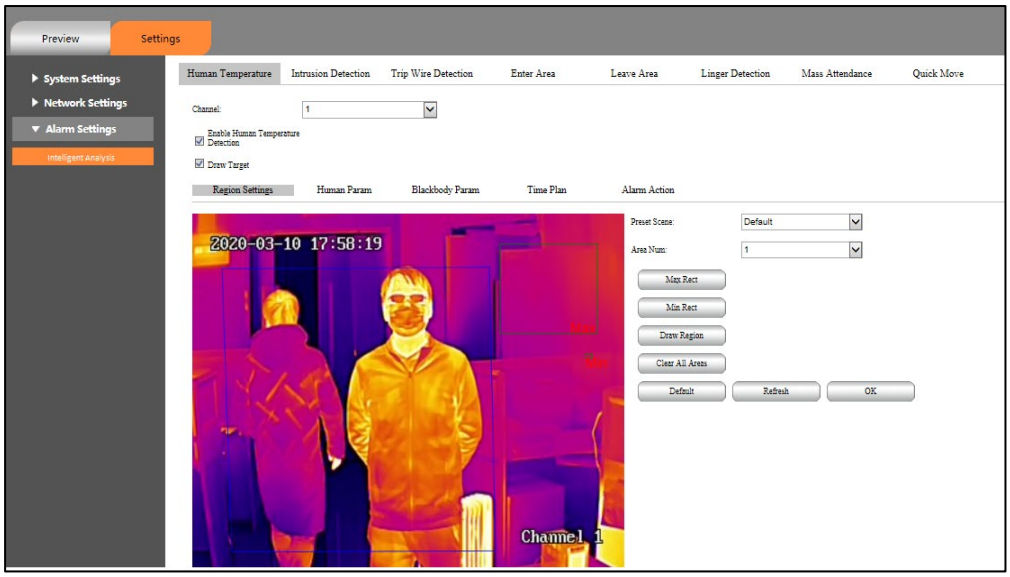

(2) Click **Draw Region** to draw a rectangular temperature measurement area with the left mouse, click **OK** to save the setting.

(3) Click **Max Rect**, use the left mouse button to draw the maximum size of the target, click **Min Rect**, use the left mouse button to draw the minimum size of the target, click **OK** to save the setting. The maximum and minimum sizes are used to filter the target size, please follow the face size in the actual scene to draw.

(4) To clear all the detection areas you've drawn, click **Clear All Areas**, and click **OK** to save the setting.

3. Temperature Measurement Parameters

The temperature camera has been calibrated when it leaves the factory, but the accuracy of the device's temperature measurement is affected by the environment, so it may need to be debugged according to the use environment. The specific calibration guidelines are as follows:

(1) Go to **Settings** > **Alarm Settings** > **Analysis** > **Human Temperature** > **Human Param**.

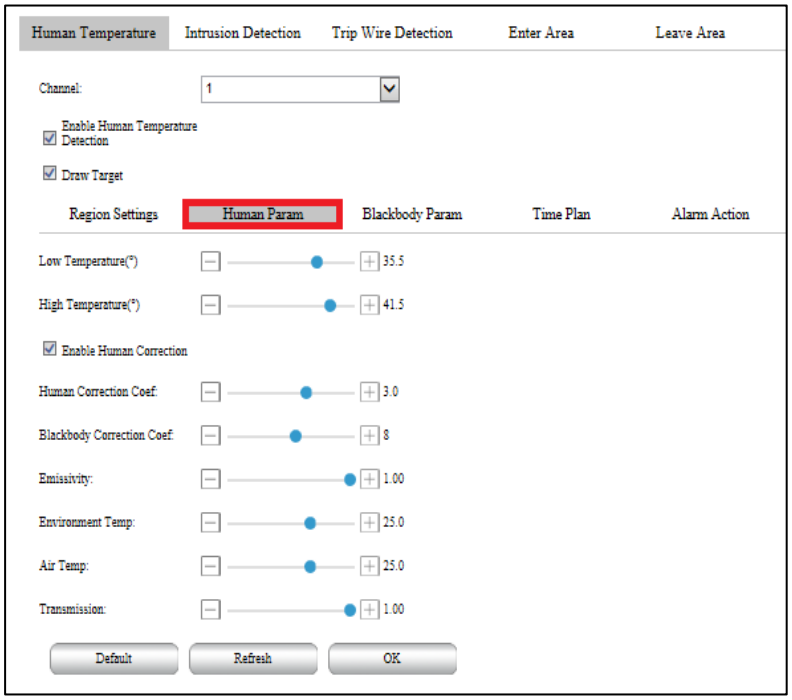

(2) Set **Low Temperature** and **Hight Temperature** to filter false positives. The thermal imager only detects targets within the temperature range. The default value of **Low Temperature** is 36°C (96.8°F) and the default value of **Hight Temperature** is 40°C (104 °F). If the values are not set properly, the thermal imager may not detect temperatures.

4. Blackbody Param

If there is a blackbody with a thermal camera on site, you can choose to configure the blackbody mode, which can further improve the temperature measurement accuracy and stability. The specific correction guidelines are as follows:

(1) Go to **Settings** > **Alarm Settings** > **Analysis** > **Human Temperature** > **Blackbody Param**.

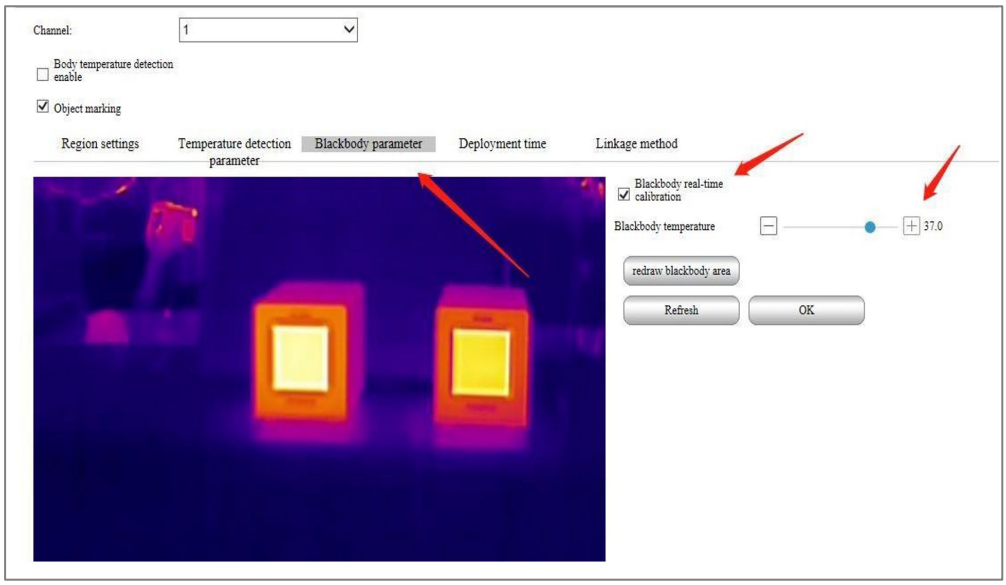

(2) Select the **Blackbody Correction** checkbox.

Note: If you are measuring without the blackbody, please make sure that you deselect this checkbox before you start measurement.

(3) Set **Blackbody Temp** to match the actual blackbody temperature you set on the blackbody.

(4) Click **Redraw Blackbody Area**, and use the left mouse button to draw a square or rectangle at the center of the blackbody furnace as the detection area.

Note: The temperature at the detection area is used as standard temperature of the blackbody. Please make sure you do not move the blackbody. Once you move the blackbody, you need to **Redraw Blackbody Area**.

(5) Click **OK** to save the settings.

Note: The radiating surface of the blackbody must face the camera's irradiation direction, and the blackbody must be on the left or right of the thermal imaging picture.

5. Precautions

1. The thermal imaging temperature measurement equipment can be continuously operated. If the power is off and restarted, it takes about

half an hour to warm up and adapt to the ambient temperature, before it can accurately measure temperature.

2. The detection area should be drawn on the web page to avoid high temperature interference to prevent false alarms.
3. The installation place of the equipment should not have strong ventilation and direct sunlight.
4. It is strongly recommended that you install the camera indoor. But if you need to use it in outdoor environment, it is recommended to place it in an L-shaped tent, preferably with a heater in the tent. There should be two doors, a side door for people to enter, and a main door for them to leave.

Chapter 5 Software Instructions

1. Software Installation

You can obtain the client-side temperature measurement software through the attached accessories or by contacting technical support or sales personnel.

(1) Right-click on *T11_setup_Vx.x.x.x.exe* and click **Run as administrator** to install the software as prompted. After the installation is complete, an icon 

will be added to the desktop.

(2) Right-click on *ODS_setup_Vx.x.x.x.exe* and click **Run as administrator** to install the software as prompted. After the installation is complete, an icon 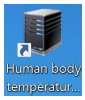

will be added to the desktop.

(3) Double click *Onvif Device Manager.msi* to install the software as prompted. After the installation is complete, an icon 

will be added to the desktop.

(4) Right-click on *WebPlugin.exe* and click **Run as administrator** to start installing the web plug-in for IE browser.

2. Time Synchronization

ONVIF Device Manager is an open-source software application used to administrate network video servers and cameras.

(1) Right-click on the **Onvif Device Manager** icon, and click **Run as administrator**.

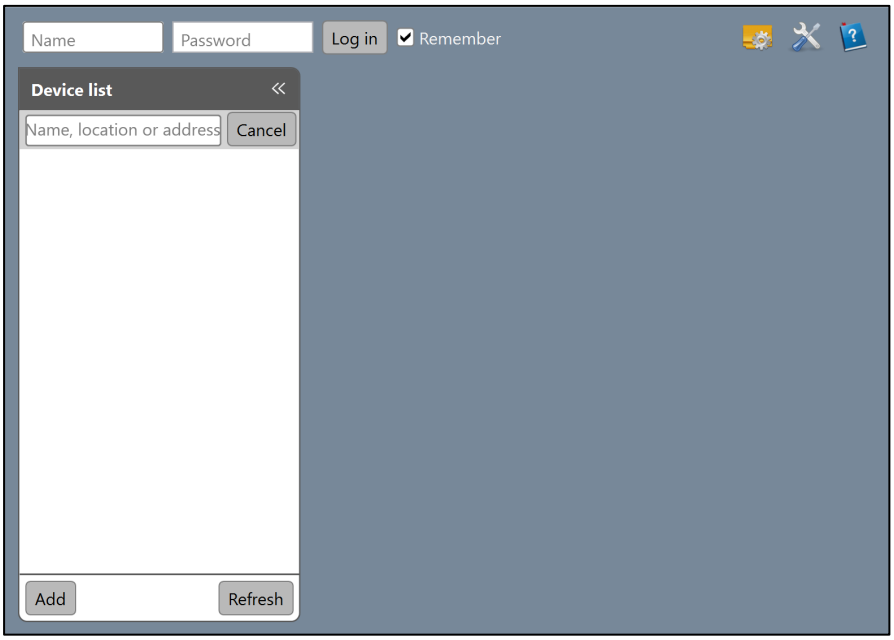

(2) Enter your username and password, and click **Login**. Your device will be automatically detected and displayed in the device list.

Username: admin

Password: Abc.12345

Note: If the device has not been detected and displayed automatically:

- Check the connection and click **Refresh**.
- From the navigation panel, click **Add** to manually add the two cameras.

(3) Select a device from the device list, e.g., IPC. The device menu displays.

(4) Click **Time settings**. The Time settings screen displays to the right of the device menu.

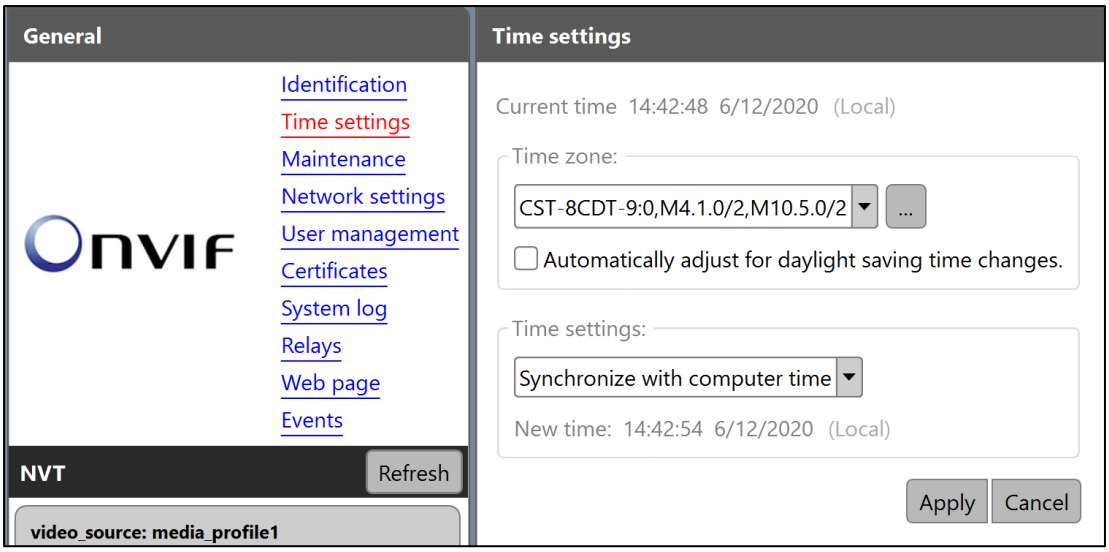

(5) From the **Time zone** drop-down list, select your actual time zone, and select the **Automatically adjust for daylight saving time changes** check box, if applicable.

(6) From the **Time settings** drop-down list, select the time synchronization method as required. It is recommended to select the **Synchronize with computer time** option.

(7) Click **Apply**.

(8) Repeat steps 5-9 to set up the time for the other camera.

Note: Please make sure that you use the same time settings for the two cameras.

3. Client login

(1) Right-click on the Human body temperature measuring server icon , and click **Run as administrator**.

Note: Please keep this server program running and do NOT close the window when you are running the T11 temperature measurement software.

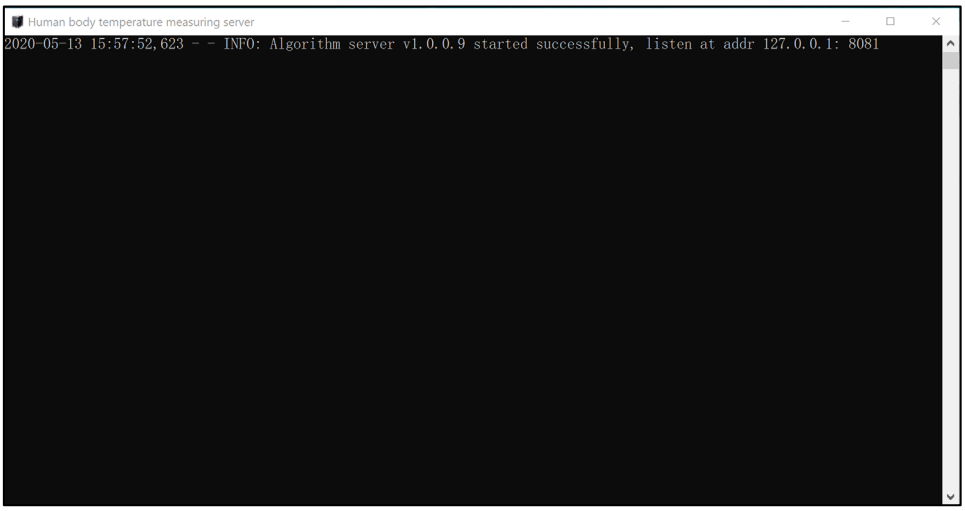

(2) Right-click on the software shortcut 

, and click **Run as administrator**.

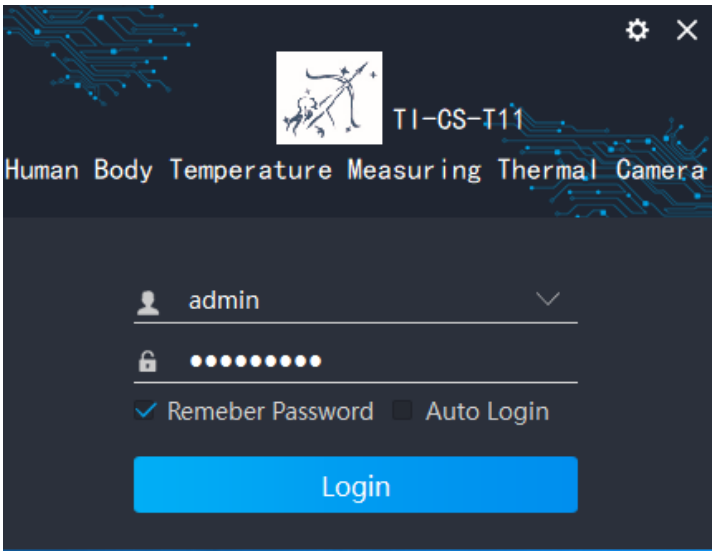

(3) Enter your username and password, and click **Login**. The main interface displays.

Username: admin

Password: Abc.12345

Note: It may take up to 2-3 minutes for the cameras to finish self-diagnosis after each start-up. Therefore, it is recommended that you run the software 2-3 minutes after you power on the equipment. In case the camera fails to load into the software, please restart the software.

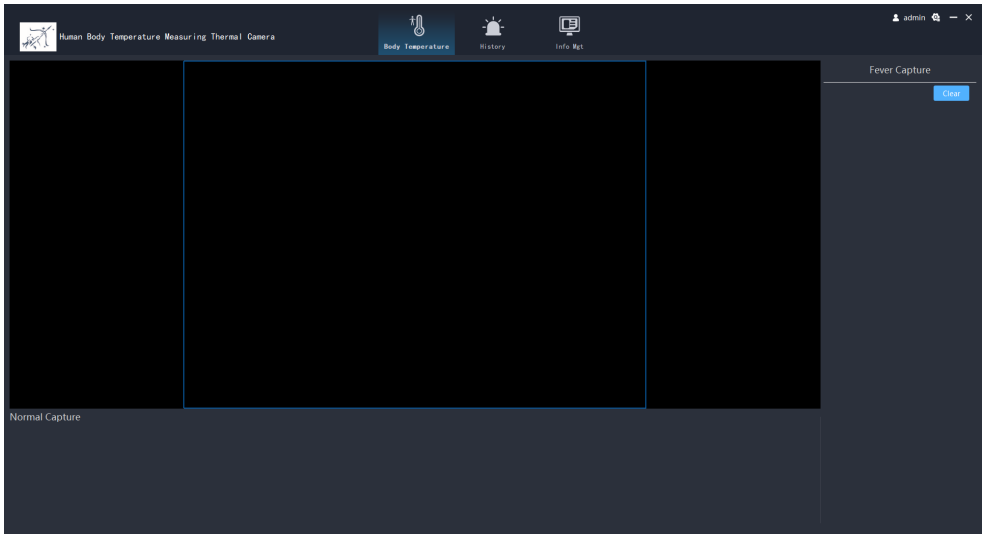

4. Video Manager Configuration

(1) On the main interface, click **Info Mgt** > **Video Manager**. The Video Manager interface displays.

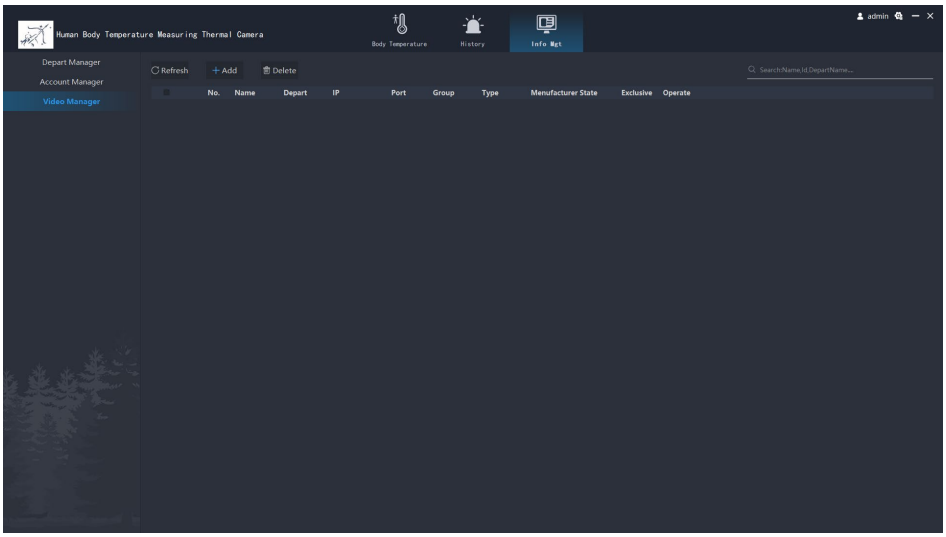

(2) Click the **Add** button. The Add Video dialog box displays.

(3) Enter the device IP, User, and Password.

Default IP address for visible camera (Light Video): 192.168.1.64

Default IP address for Thermal camera (IRD Video): 192.168.1.65

User: admin

Password: Abc.12345

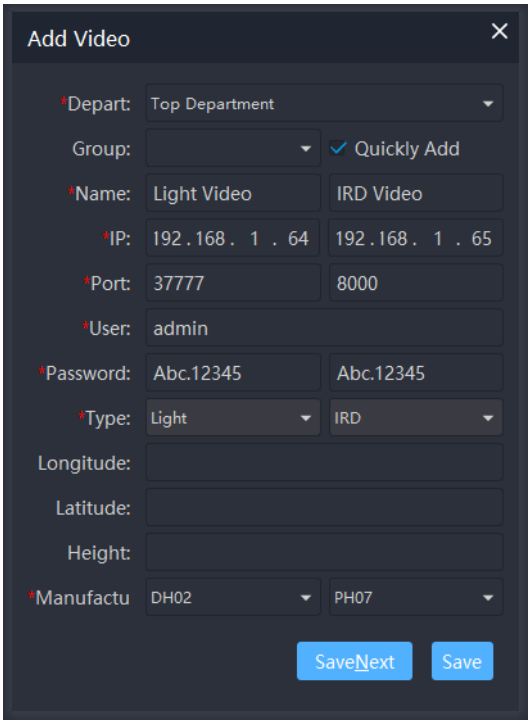

(4) Click **Save**. The devices are added.

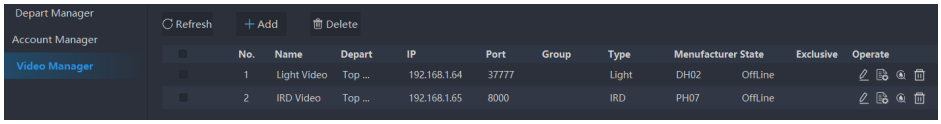

5. Detection Area Configuration

To configure the detection area:

(1) On the Video Manager interface, click the **Detect Area** icon ( ). The Detect Area Manager displays.

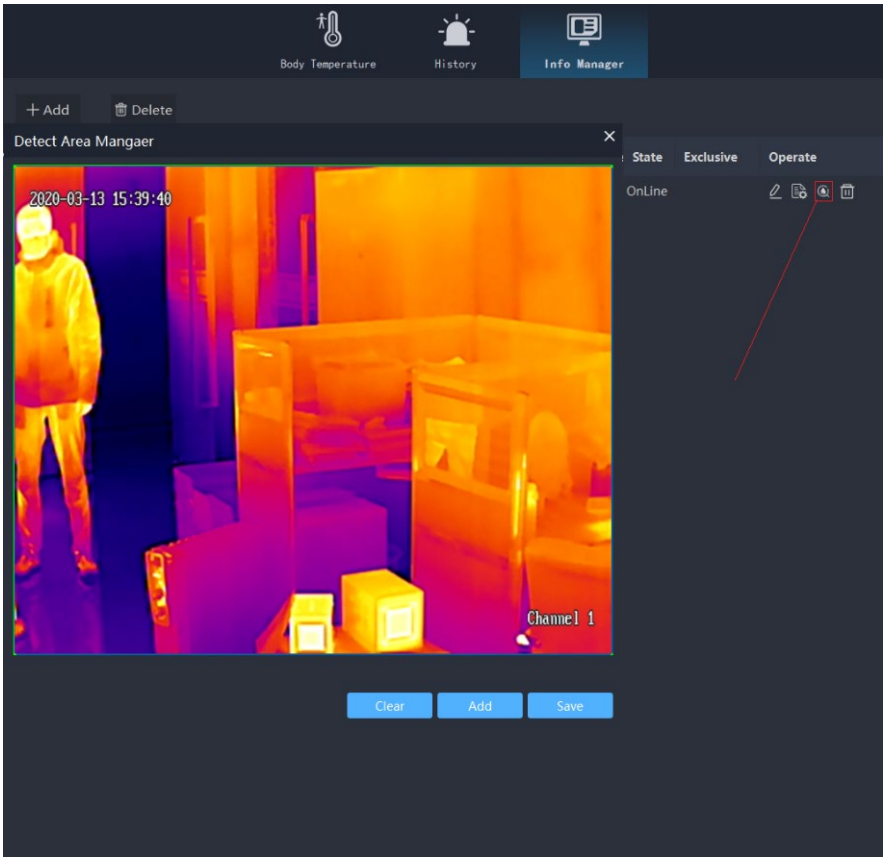

(2) Draw the detection area with the left mouse button.

(3) Click **Save**.

6. Body Temperature Detection

Enter the **Body Temperature** interface. After the device is online, it will automatically connect to the video.

The temperature detection interface has two parts, the left side displays the real-time video and the right side displays the alarm information. The alarm information includes alarm time, partial cutout of the alarm, and alarm temperature.

7. Alarm Record Query

Enter the **History** interface, you can search and view the alarm logs.

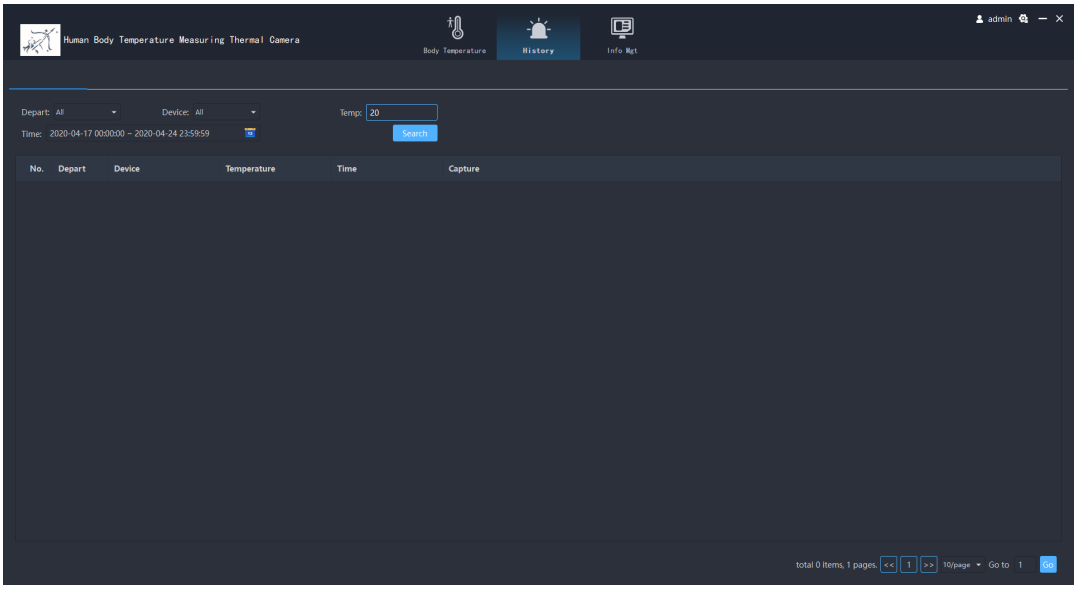

8. Basic System Configurations

1) Click the **Settings** icon ( ) > **Setup**. The system configuration interface displays.

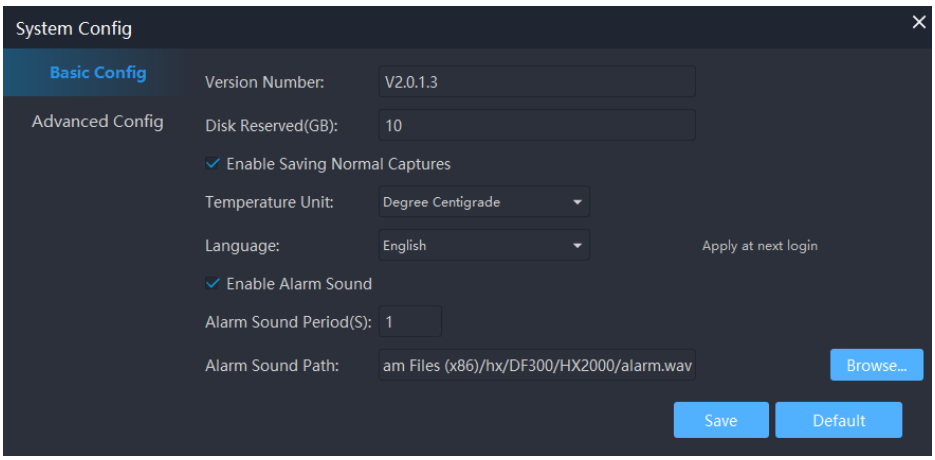

2) To stop taking pictures for people with normal temperatures, deselect the **Enable Save Normal Capture** check box, and click **Save**. Only alarm pictures will be taken and saved to the alarm folder under the installation directory.
3) To change the temperature unit, select a unit from the Temperature Type drop-down list that you prefer.
4) To turn on the alarm sound, select the **Enable alarm sound** check box. To change the alarm duration, change the value (in seconds) of the **Alarm Sound Period(s)** field. To change a different alarm sound, change the Alarm Sound Path to select a different audio file from your computer. If you would like to use a custom audio file, you need to save the file in the software installation directory for selection.

Note: Currently, some changes (such as language change) you made here will take effect only if you log out and log in again to the system.

9. Advanced System configurations

1) Click the **Settings** icon ( ) > **Setup**. The system configuration interface displays.
2) Click **Advanced Config**.

3) To configure the alarm temperature threshold other than the default value, change the value in the Alarm Threshold field. When the detected temperature is lower than this threshold, it is marked with green as a normal temperature. Once the detected temperature exceeds the threshold, it is regarded as a fever alarm. A picture with a red temperature will be taken, and the alarm will sound.

Note: If you have the T11 Value-Added Service software installed, you can receive email notifications once there are abnormal temperatures detected.

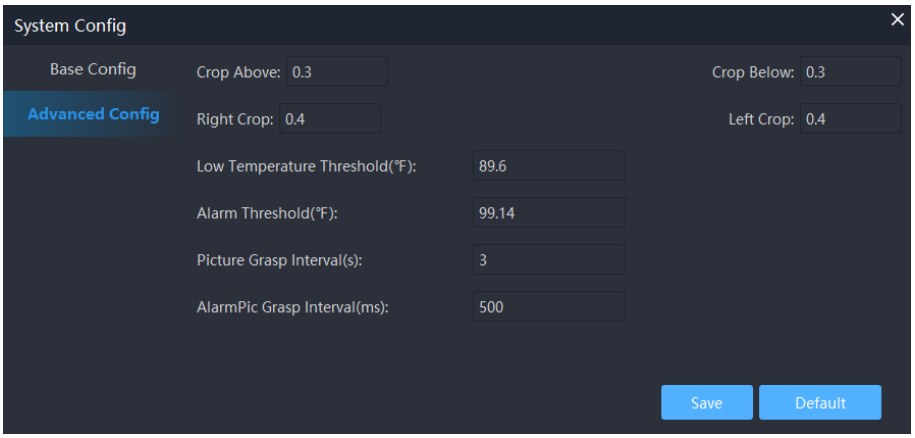

Chapter 6 FAQs

1. How to turn off recording?

   On the main interface, click the **Settings** icon ( ) > **Setup**. The System Config screen displays.

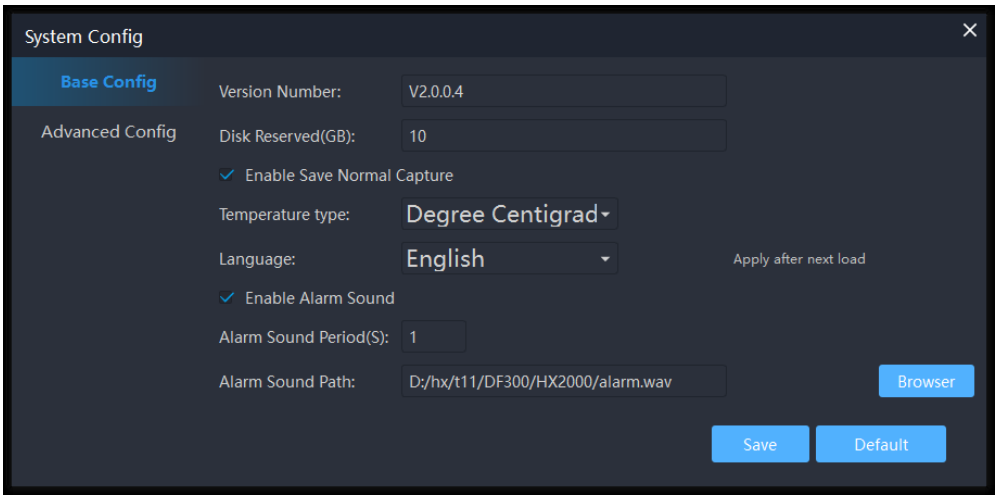

   Make sure the **Enable Save Normal Capture** checkbox is unchecked, and click **Save**. After this setting, only alarm pictures will be taken and saved to the alarm folder under the installation directory.

2. How to change the temperature unit from Celsius to Fahrenheit?

   On the main interface, click the **Settings** icon ( ) > **Setup**. The System Config screen displays.

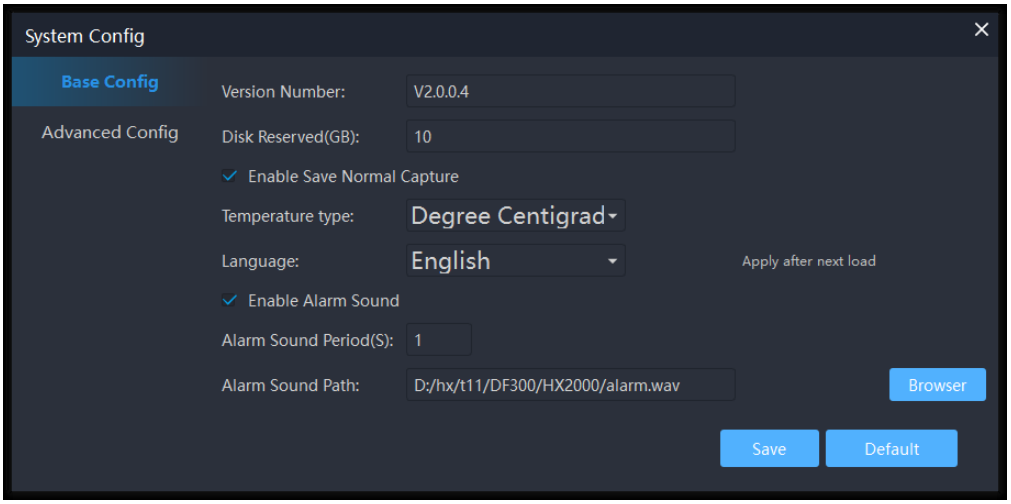

   From the Temperature Type drop-down list, select **Degree Fahrenheit**. Click **Save**.

3. What is blackbody? Do I have to match blackbody?

Blackbody is a calibration device that can set the temperature value and is the standard temperature source. Thermal imaging equipment performs real-time calibration based on the temperature of the blackbody; the blackbody is placed opposite the thermal imager to ensure that the front of the blackbody appears on the thermal imager's screen. The temperature measurement accuracy is above a higher level (±0.54℉ accuracy). The blackbody only needs to be powered, and does not need to be networked.

- Please never touch the sensor to the black body calibrator, tampering with the sensor may damage the unit,
- Please re-calibrate the black body if the position of the thermal imaging device or the blackbody is moved.

4. Why are there false alarms?

   Please check the following:

   (1) Please make sure that the equipment is properly installed as explained in this manual.

   (2) Please make sure that people are standing in front of the camera at a distance of 2 to 3 meters.

   (3) If you are using the blackbody for measurement, make sure you have: a. selected the "Blackbody Correction" checkbox; b. set the Blackbody Temp the same as the actual blackbody temperature you set on the blackbody; c. drawn the blackbody area on the place where the blackbody furnace actual is.

   (4) If you are not using the blackbody for measurement, please wait for 1 to 2 hours for the equipment to reach a stable functioning status.

5. Can the temperature screening equipment be installed outdoors?

   The optimal installation environment is indoors (a relatively isolated area from the outside world), which is the same as the current surface temperature measurement methods on the market.

From the thermal imaging human body temperature measurement principle, you can find that outdoor wind and sun are easy to affect the body surface temperature, and the working state of the equipment, which results in a deviation between the measured body surface temperature and the real body temperature.

If the user does not have a suitable indoor environment, it is recommended to temporarily establish a temperature measurement channel in the corresponding area for the indoor and outdoor direct communication area, outdoor doorway area. Avoiding direct sunshine, build a controlled environment to keep the environment stable to manually create a relatively stable temperature measurement environment.

6. Thermal Camera is IP66?

   The thermal camera is IP66 weatherproof rated, but the calibrator – the blackbody is not rated for outdoor use. Outside temperature and humidity may affect the temperature readings and we recommend using the system indoors.

7. Can I use T11 to monitor in real-time?

   The T11 body temperature solution is designed to be used for real-time monitoring, allowing you to immediately detect high body temperatures in a controlled environment - range from 6 feet to 20 feet with 60-degree covered area. It can be used locally (off-network) or can be connected to a network for additional monitoring.

   For better accurate reading, we recommend people face forward toward to the camera, and stand still for a couple of seconds, showing a side face or only appearing for a second may not provide accurate readings.

8. Temperature comparison table?

   The average normal oral temperature is 98.6°F (37°C).

   A rectal temperature is 0.5°F (0.3°C) to 1°F (0.6°C) higher than an oral temperature.

   An ear (tympanic) temperature is 0.5°F (0.3°C) to 1°F (0.6°C) higher than

an oral temperature.

An armpit (axillary) temperature is usually 0.5°F (0.3°C) to 1°F (0.6°C) lower than an oral temperature.

A forehead (temporal) scanner is usually 0.5°F (0.3°C) to 1°F (0.6°C) lower than an oral temperature.

Axillary/Forehead (°F)	**Oral (°F)**	**Rectal/Ear (°F)**
98.4–99.3	99.5–99.9	100.4–101

Chapter 7 Warranty and After sales

1. Customer satisfaction is what we've been pursuing all along and quality is what brings our company prosperity. The cameras manufactured by our company integrates independent technology and unique design.
2. If you have any suggestions either for our products or services, please contact us so we can continuously improve and offer you the best.
3. Detailed user manuals are packed. We can also assist with the installation and debugging if it is feasible.
4. If there are any problems regarding quality, technology and operation, we will respond as quickly as we can.
5. Your suggestions are valuable, and your support will be our driving force. Thank you!

CREATIVESTAR

CreativeStar Solutions

Address: 1601 Trapelo Road Suite 260, Waltham MA 02451
TEL: +1(617) 326-5308
E-mail: info@cssinco.com
Website: www.cssinco.com